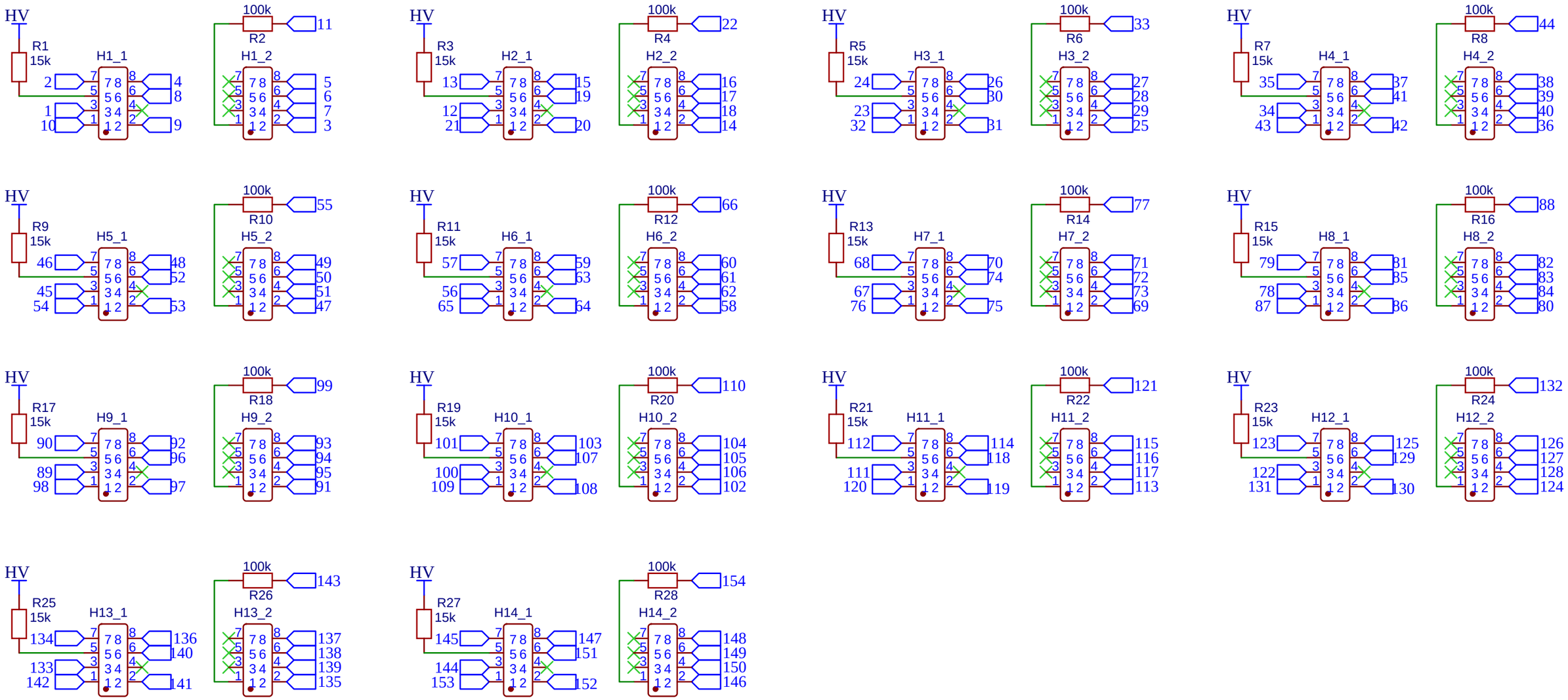

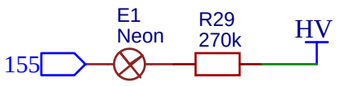

PROJECT: Nixie Calculator		
BOARD: IN-16 Display		
NOTE: Use at your own risk		
TITLE: Sockets		REV: 1
	Company:	Sheet: 1/2
	Date: 2021-05-20 Drawn By:	

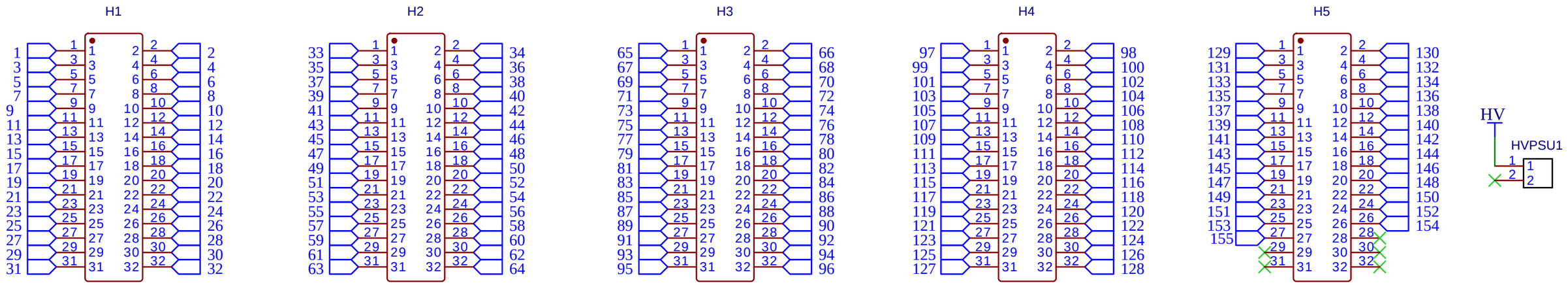

PROJECT: Nixie Calculator
BOARD: IN-16 Display
NOTE: Use at your own risk

TITLE: Connectors

REV: 1

Company:

Sheet: 2/2

Date: 2021-05-20 Drawn By: